PRODUCT DATASHEET

MICRO BNC STRAIGHT CRIMP / CRIMP JACK

67-054-B66-FB1

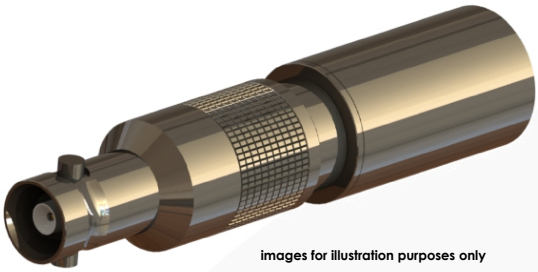

images for illustration purposes only

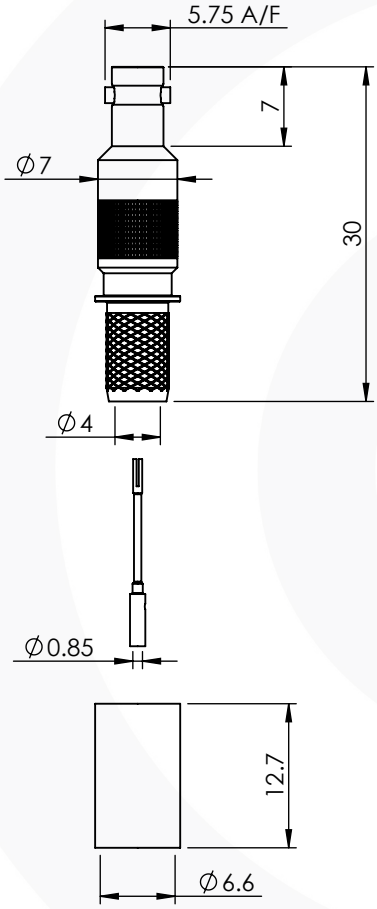

Suitable for Cables:

(FB) Belden 1505A, Draka 0.8/3.7 A/F, Image 720, Bryant BD SD50A, Percon VK6, Conducfil 14472,

Stripping Dimensions

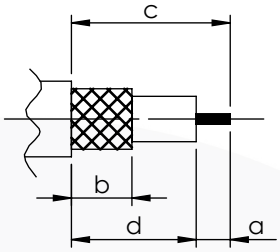

a = 4.0 mm [0.1575"]
b = 8.0 mm [0.3150"]
c = 16.0 mm [0.6299"]
d = 12.0 mm [0.4724"]

* CUT FOIL TO DIM. "b"

Assembly Procedure: AP001

Tooling

Centre Contact: SQ 1.07 [0.0421"] A/F Tool No: 96-HTS-77

Crimp Sleeve: Hex 6.48 [0.255"] A/F Tool No: 96-HTS-77

Alignment Tool: Not Applicable Extraction: Not Applicable

Environmental Specification

Operating Temp: -55 to +155 Deg C.
IP Rating (Mated): IP 64

Electrical Specification

Impedance: 75 Ohm
Frequency: 0-12 GHz
Dielectric W/V: 1000 Veff
Insulation res: 10000 M-Ohm

Mechanical Specification

Contact Retention: 10 N min
Cable Retention: 150 N min
Mating cycles: 500
Weight: 5.06 g

Connector Interface

image for illustration purposes only

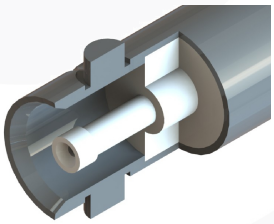

ITEM	DESCRIPTION	MATERIAL	PLATING
4	CRIMP SLEEVE	BRASS	NICKEL
3	INSULATOR	PTFE	N/A
2	CENTRE CONTACT	BERYLLIUM COPPER	GOLD
1	BODY	BRASS	NICKEL

A4	SHEET 1 OF 1	DIMENSIONS ARE IN MILLIMETRES		
REVISION : A01		NAME	SIGNATURE	DATE
ISSUE : 1	DRAWN	BS		15/06/2018
	CHK'D	I.G.		15/10/2018
	APPV'D			

6-8 COLNE ROAD, TWICKENHAM, MIDDLESEX. TW1 4JR

THE INFORMATION IS GIVEN AS AN INDICATION ONLY AND IS SUBJECT TO CHANGE WITHOUT NOTICE. IN THE CONTINUAL GOAL TO IMPROVE OUR PRODUCTS,WE RESERVE THE RIGHT TO MAKE ANY MODIFICATIONS NECESSARY WITHOUT PRIOR NOTICE.

© 2013. THIS DOCUMENT IS THE PROPERTY OF COAX CONNECTORS LTD. REPRODUCTION OR COMMUNICATION IN ANY FORM TO A THIRD PARTY IS PROHIBITED WITHOUT PRIOR WRITTEN CONSENT

Cad File: M:\Engineering Data\CAD Data\Drawings\Z - Match IT SERIES\DATA SHEETS\67-054-B66-FB1

Model File: M:\Engineering Data\CAD Data\Solid Models\Z - Match IT SERIES\TOP LEVEL\MICRO BNC 10846

Tel: +44(0)20 8538 9090 Fax: +44(0)20 8538 9890 Email: info@coax-connectors.com