PRODUCT DATASHEET

SMA STRAIGHT SOLDER/CLAMP PLUG

30-001-DS3-AK

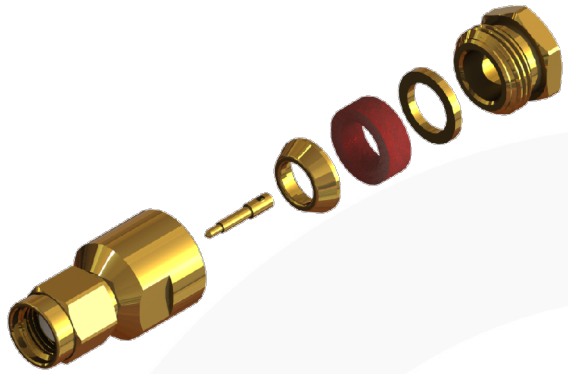

images for illustration purposes only

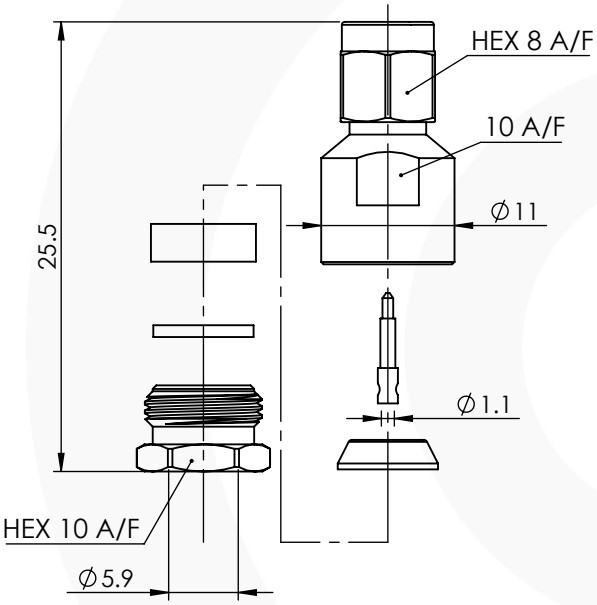

ITEM	DESCRIPTION	MATERIAL	PLATING
8	CLAMP	STAINLESS STEEL	GOLD
7	WASHERS	STAINLESS STEEL	GOLD
6	COUPLING NUT	STAINLESS STEEL	GOLD
5	GASKETS	SILICONE	N/A
4	CLAMP NUT	STAINLESS STEEL	GOLD
3	INSULATOR	PTFE	N/A
2	CENTRE CONTACT	BRASS	GOLD
1	BODY	STAINLESS STEEL	NICKEL

A4	SHEET 1 OF 1		DIMENSIONS ARE IN MILLIMETRES	
REVISION :	A00		NAME	SIGNATURE	DATE
ISSUE :	1	DRAWN	G.E.		27/06/2022
		CHK'D	P.S.		27/06/2022
		APPV'D			

6-8 COLNE ROAD,
TWICKENHAM,
MIDDLESEX.
TW1 4JR

THE INFORMATION IS GIVEN AS AN INDICATION ONLY AND IS SUBJECT TO CHANGE WITHOUT NOTICE. IN THE CONTINUAL GOAL TO IMPROVE OUR PRODUCTS,WE RESERVE THE RIGHT TO MAKE ANY MODIFICATIONS NECESSARY WITHOUT PRIOR NOTICE.

Suitable for Cables:

(AK) RG223

Stripping Dimensions

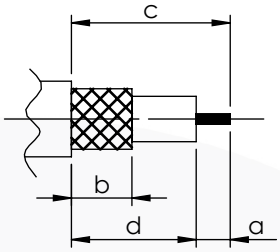

a = 2.0 mm
b = 4.0 mm
c = 5.0 mm
d = 3.0 mm

* CUT FOIL TO DIM. "b"

Assembly Procedure:

Tooling

Centre Contact: Solder — Tool No: Solder

Crimp Sleeve: Not Applicable — Tool No: Not Applicable

Alignment Tool: Not Applicable — Extraction: Not Applicable

Environmental Specification

Operating Temp: -55 to +155 Deg C.
IP Rating (Mated): IP 67

Electrical Specification

Impedance: 50 Ohm
Frequency: 0-10 GHz
Dielectric W/V: 750 Veff
Insulation res: 5000 M-Ohm

Mechanical Specification

Contact Retention: 27 N min
Cable Retention: 150 N min
Mating cycles: 500
Weight: 8.40 g

Connector Interface

image for illustration purposes only

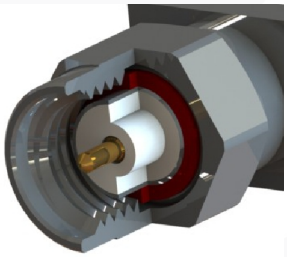

© 2022. THIS DOCUMENT IS THE PROPERTY OF COAX CONNECTORS LTD. REPRODUCTION OR COMMUNICATION IN ANY FORM TO A THIRD PARTY IS PROHIBITED WITHOUT PRIOR WRITTEN CONSENT

Cad File: C:\Fusion Components Ltd\CAD Data\Drawings\Z - Match IT SERIES\DATA SHEETS\30-001-DS3-AK
Model File: C:\Fusion Components Ltd\CAD Data\Solid Models\Z - Match IT SERIES\TOP LEVEL\SMA 11093

Tel: +44(0)20 8538 9090 Fax: +44(0)20 8538 9890 Email: info@coax-connectors.com